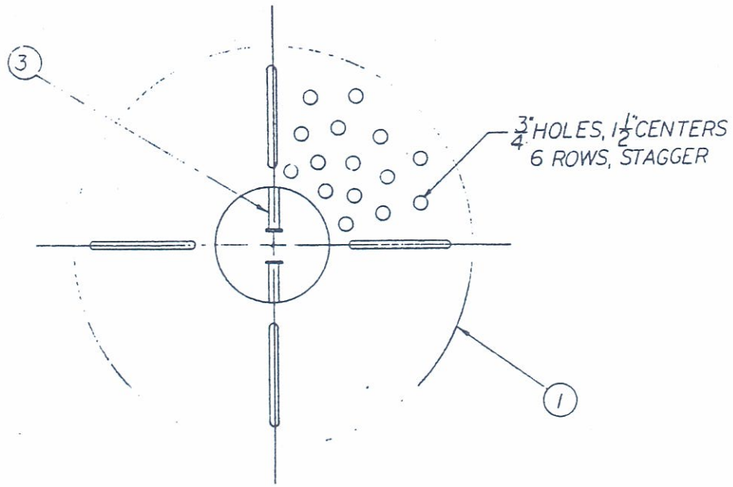

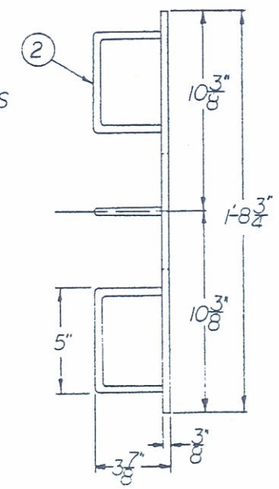

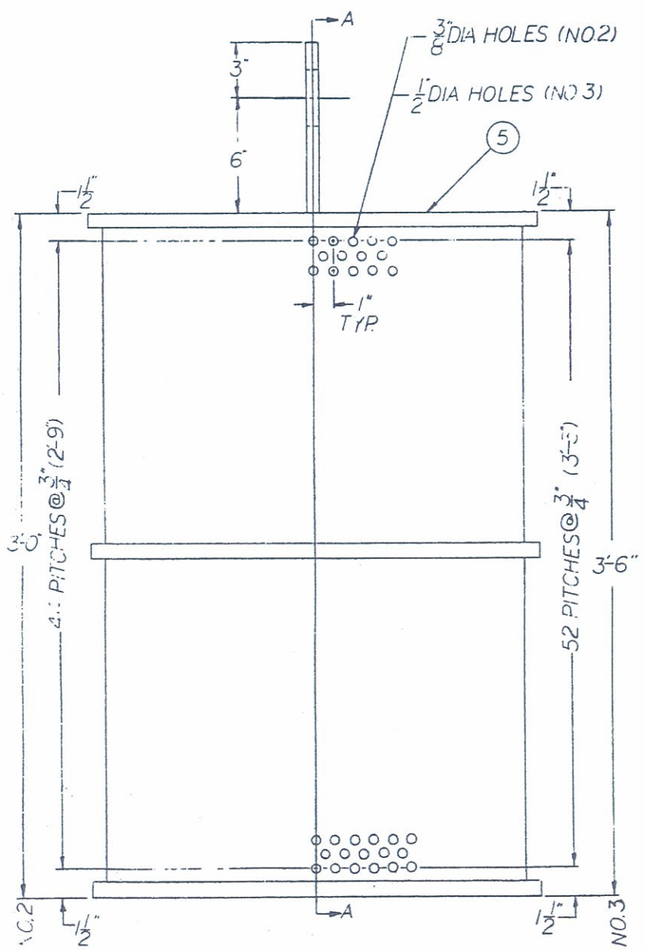

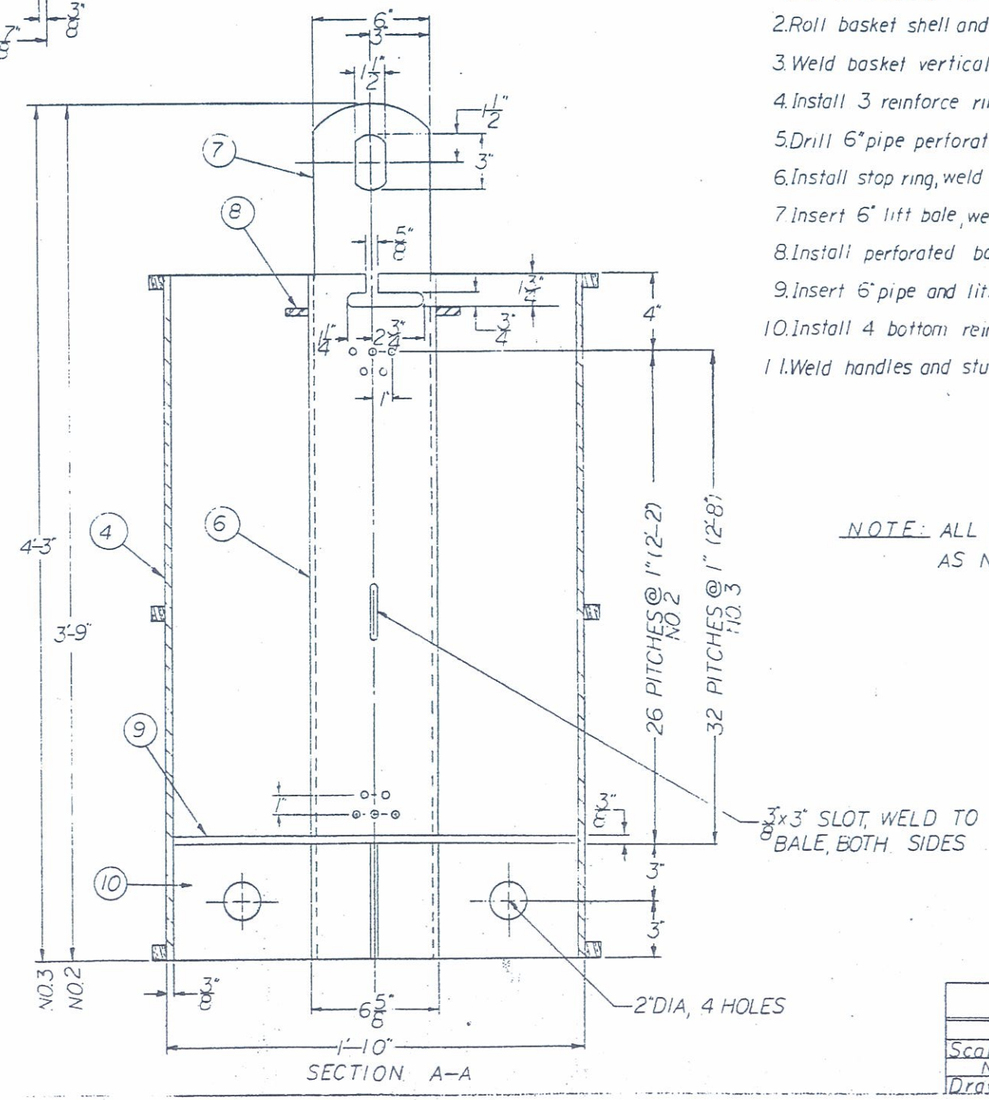

BILL OF MATERIALS — NO. 3 BASKET				
ITEM	DESCRIPTION	CUTTING DIMENSIONS	QTY	NOTES
1	COVER PLATE	3/8" PLATE x 1'-8 3/4" O.D.	1	
2	HANDLES	3/8" DIA. x 1'-0"	4	
3	LOCK LUGS	1/2" DIA x 2" NELSON STUD	2	
4	SIDE WALL	3/8" PLATE 3'-6" x 5'-9 1/2"	1	PERF.
5	REINF. BARS	3/4" x 3/4" x 6'-8"	3	
6	CENTER PIPE	6" DIA x 3'-6" - SCHED 40	1	PERF.
7	LIFT BALE	5/8" PLATE x 6" x 4'-3"	1	
8	STOP PLATE	3/8" PLATE x 8" O.D.	1	
9	FLOOR	3/8" PLATE x 1'-9 1/4" OD	1	PERF.
10	FLOOR BARS	3/8" PLATE x 7 1/4" x 6"	4	

BILL OF MATERIALS — NO. 2 BASKET				
ITEM	DESCRIPTION	CUT. DIMENS	QTY	NOTES
1	PLATE	SAME	1	
2	HANDLES	SAME	4	
3	LUGS	SAME	2	
4	SIDEWALL	3/8" PLATE x 3'-0" x 5'-9 1/2"	1	PERF.
5	BARS	SAME	2	
6	CNTR. PIPE	6" DIA x 3'-0" SCH 40	1	PERF.
7	BALE	5/8" x 6" x 3'-9"	1	
8	STOP RING	SAME	1	
9	FLOOR	SAME	1	
10	BAR	SAME	4	

FABRICATION SEQUENCE

1. Cut all materials as per Bill of Materials.
2. Roll basket shell and 3/4" reinforcing bar
3. Weld basket vertical seam (continuous weld inside and outside
4. Install 3 reinforce rings, weld continuous top and bottom
5. Drill 6" pipe perforations, cut locking and weld slots
6. Install stop ring, weld to 6" pipe
7. Insert 6" lift bale, weld to 6" pipe
8. Install perforated basket floor, weld
9. Insert 6" pipe and lift bale thru floor, center and weld
10. Install 4 bottom reinforcing bars, weld
11. Weld handles and studs to top cover plate

NOTE: ALL WELDS ARE CONTINUOUS, EXCEPT AS NOTED

Note:

Drawings are:

- provided by American Spin-A Batch Co. International as examples of baskets that work for our host plant - Virginia Galv. Corp.
- not intended to apply to all galvanizing plants methods or materials.
- not for reprint or resale by parties other than American Spin-A-Batch Co. International.

AMERICAN SPIN-A-BATCH CO.	
Richmond, Virginia	
Scale 3" = 1'-0"	Date June 18 1980
NO. 2 and 3 Baskets	
Drawing no. SAB 201	Drawn wkd

ITEM	DESCRIPTION	CUTTING LIST	QTY	NOTES
1	SHELL	3/8" PLATE	1	PERF
2	CENTER TUBE	6" DIA x 3'-0" SCH. 40	1	PERF
3	BALE	5/8" x 6" x 3'-9"	1	
4	CONE	3/8" PLATE	1	PERF
5	STIFFENERS	1/4" PLATE	4	
6	BASE RING	2" x 1/2"	1	ROLLED
7	STIFFENING RING	3/4" SQ.	2	ROLLED
8	LIFT ANGLE	3" x 3" x 3/8"	1	ROLLED
9	TUBE STEADY	3" x 3/8"	3	

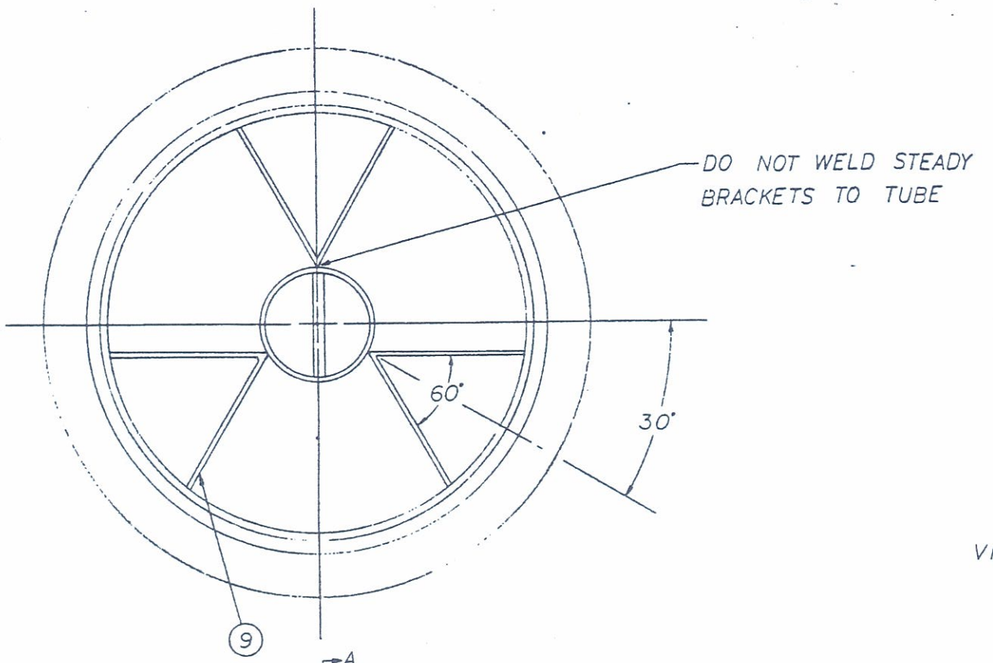

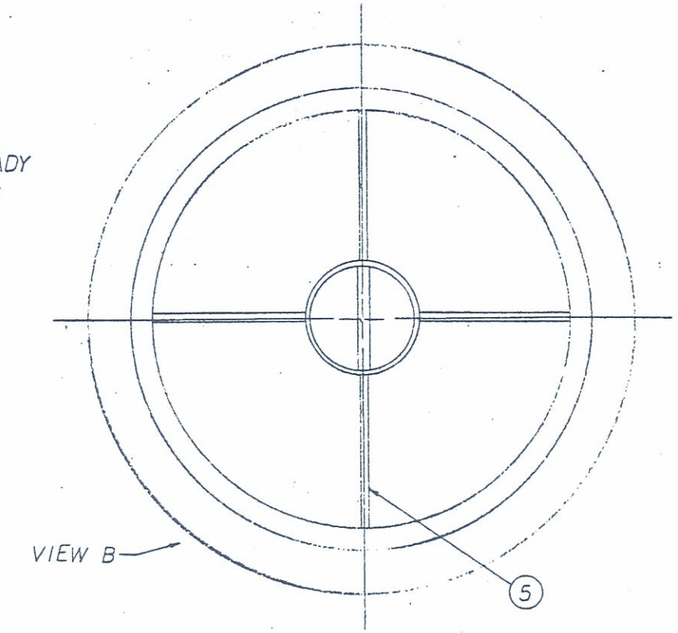

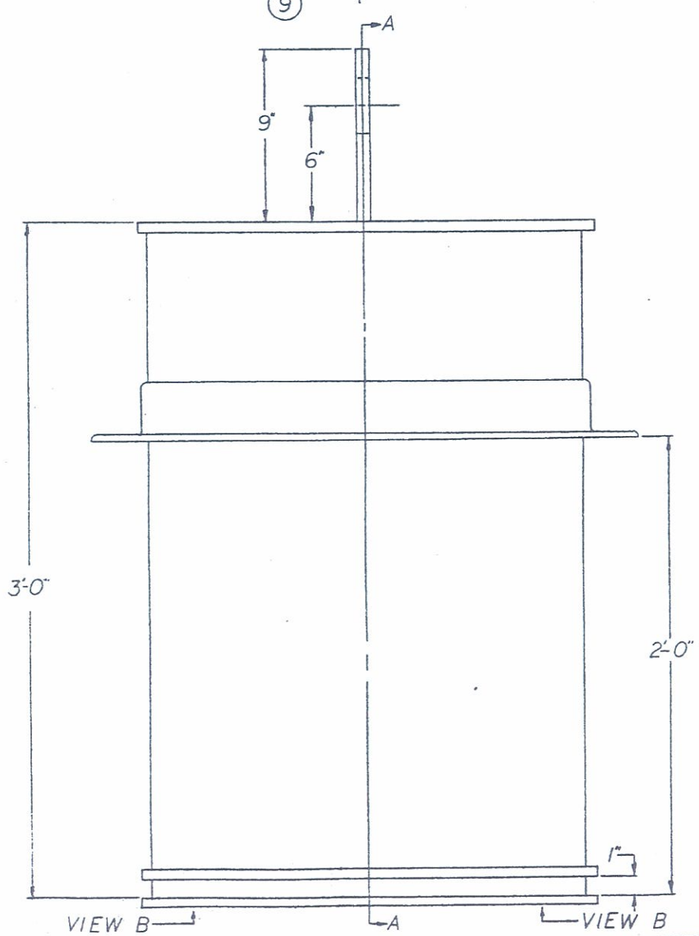

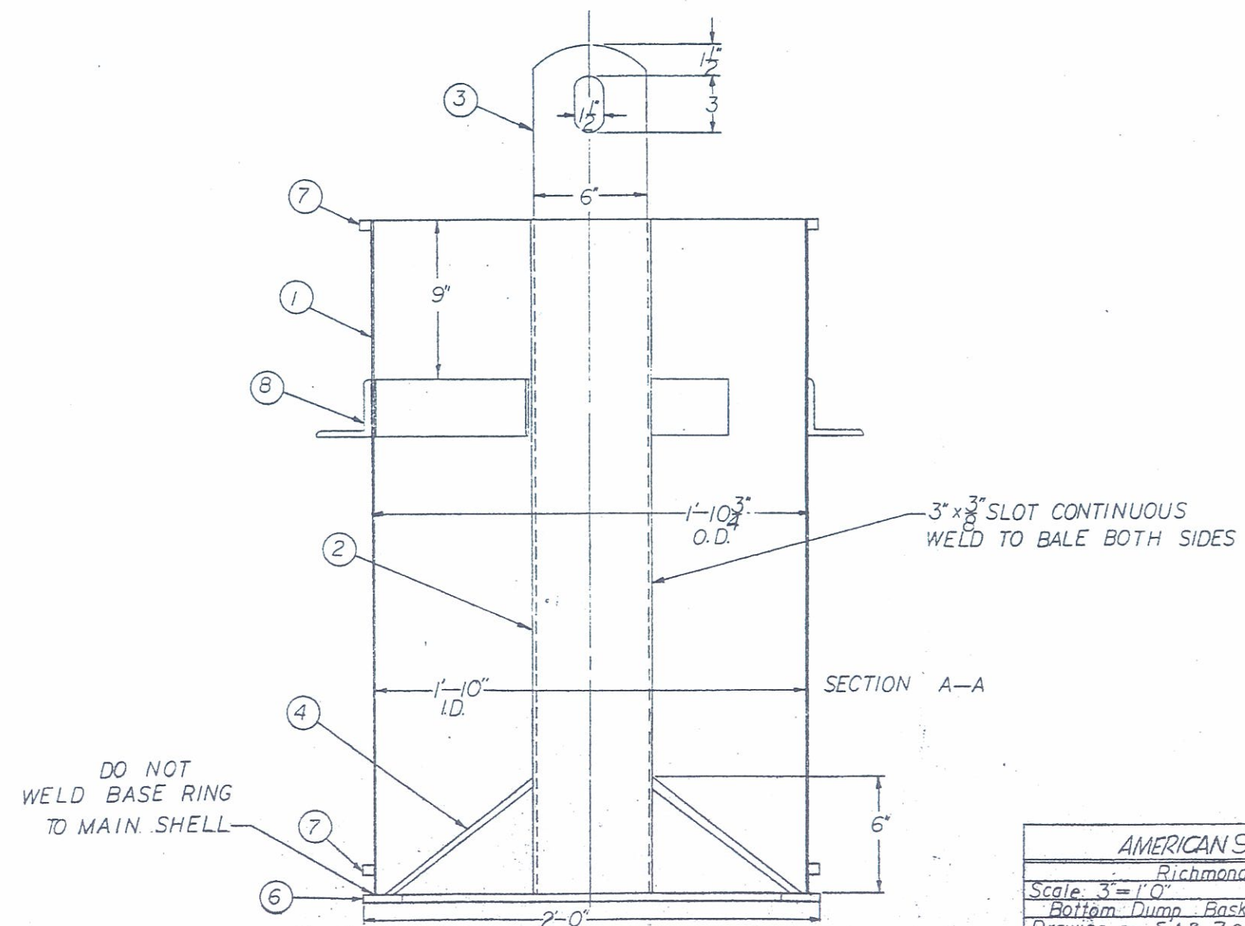

Note:

Drawings are:

- provided by American Spin-A Batch Co. International as examples of baskets that work for our host plant - Virginia Galv. Corp.
- not intended to apply to all galvanizing plants methods or materials.
- not for reprint or resale by parties other than American Spin-A-Batch Co. International.

AMERICAN SPIN-A-BATCH CO.	
Richmond, Virginia	
Scale: 3" = 1'-0"	Date 19 1980
Bottom Dump Basket	
Drawing no. SAB 203	Drawn wkd

ITEM	QTY	CUT DIMENS	DESCRIPTION
1	1	3/8 x 1'-9" OD x 7" ID	PERFORATED
2	as reqd	1'-6" ID x 5/16" x 2"	RING
3	as reqd	10" OD x 5/16" x 2"	RING
4	12	3/4 DIA x 4'-7 9/16" x	5' ROD BASKET ONLY
5	1	1" DIA x 11'-4"	" " "
6	2	1" DIA x 9 1/2"	STIFFENERS
7	1	3/4 DIA x 2 1/2"	"
8	as reqd	5/16" x 2 x 4" HRS	SPACERS
9	2	3/16" x 4 5/8" x 9 3/8"	STIFFENER — PERF
10	2	3/16" x 4 9/16" x 5"	" "
11	1	3/4 DIA x 7 3/8"	STIFFENER
12	12	3/4 DIA x 5'-7 9/16"	6' ROD BASKET ONLY
13	1	1" DIA x 13'-4"	" " " "
14	12	3/4 DIA x 6'-7 9/16"	7' ROD BASKET ONLY
15	1	1" DIA x 15'-4"	" " " "
16	12	3/4 DIA x 3'-4 9/16"	4' ROD BASKET ONLY
17	1	1" DIA x 8'-10"	" " " "

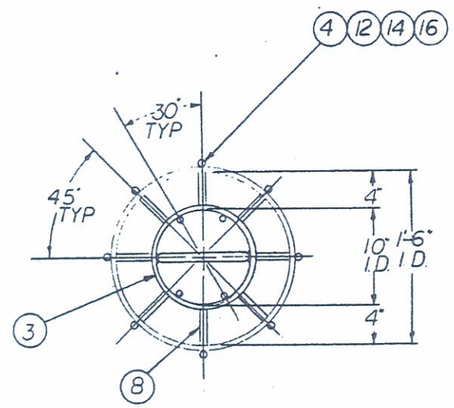

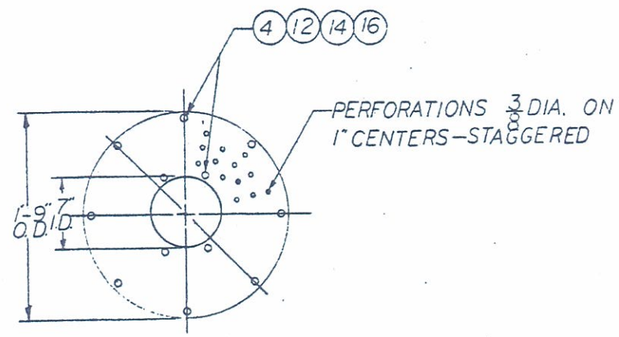

BOTTOM PLATE

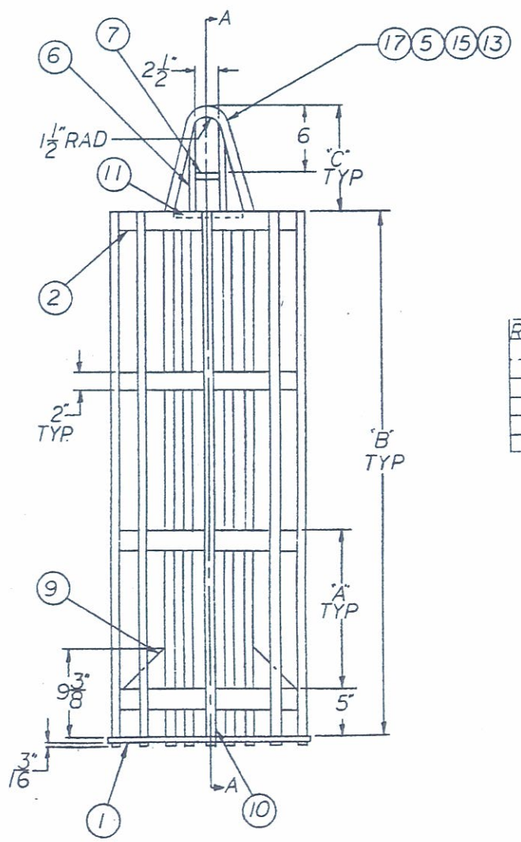

ROD SIZE	DIMEN. A	DIMEN. B	DIMEN. C
4'	1'-3"	3'-4"	1'-2"
5'	1'-4 9/16"	4'-6 1/2"	1"
6'	1'-3 1/2"	5'-7"	1"
7'	1'-2 15/16"	6'-7"	1"

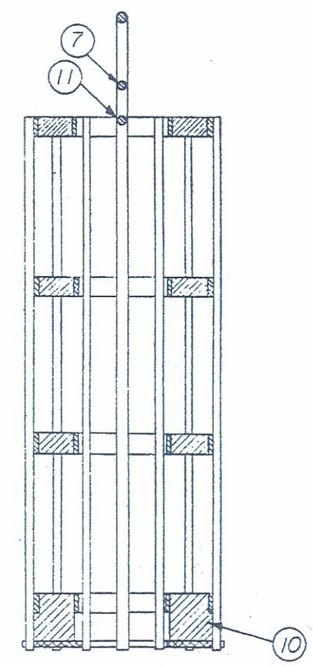

SECTION A-A

Note:

Drawings are:

- provided by American Spin-A Batch Co. International as examples of baskets that work for our host plant - Virginia Galv. Corp.
- not intended to apply to all galvanizing plants methods or materials.
- not for reprint or resale by parties other than American Spin-A-Batch Co. International.

NOTES 1. ALL MATERIAL LOW CARBON STEEL, UNLESS OTHERWISE NOTED.

2. BASKETS ARE ALL WELDED CONSTRUCTION.

AMERICAN SPIN-A-BATCH CO.
Richmond, Virginia
Scale 1/2" = 1'-0" | Date June 30 1980
Long Rod Basket
Drawing no SAB 204 | Drawn wkg

ITEM	QTY	CUT DIMENSIONS	DESCRIPTION
1	1	5/8" x 6" x A	LIFT BALE
2	1	5/8" PLATE x 2'-0" DIA	BASKET FLOOR
3	1	6" DIA x SCH 80 x B	CENTER PIPE
4	4	3/4" BAR x 2" x C	OUTER SUPPORT

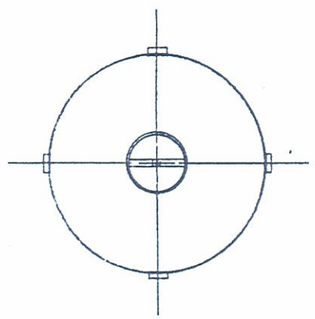

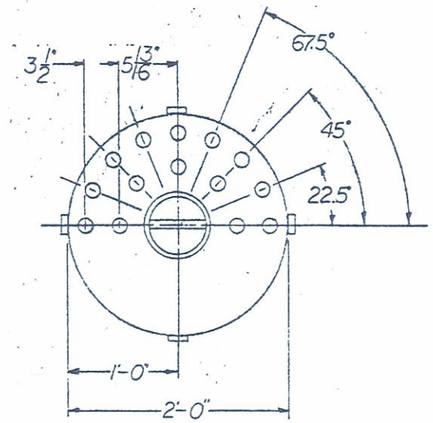

RODS -1" - 1 1/4" - 1 1/2" DIA.
ALL HOLES 1 5/8" DIA

Note:

Drawings are:

- provided by American Spin-A Batch Co. International as examples of baskets that work for our host plant - Virginia Galv. Corp.
- not intended to apply to all galvanizing plants methods or materials.
- not for reprint or resale by parties other than American Spin-A-Batch Co. International.

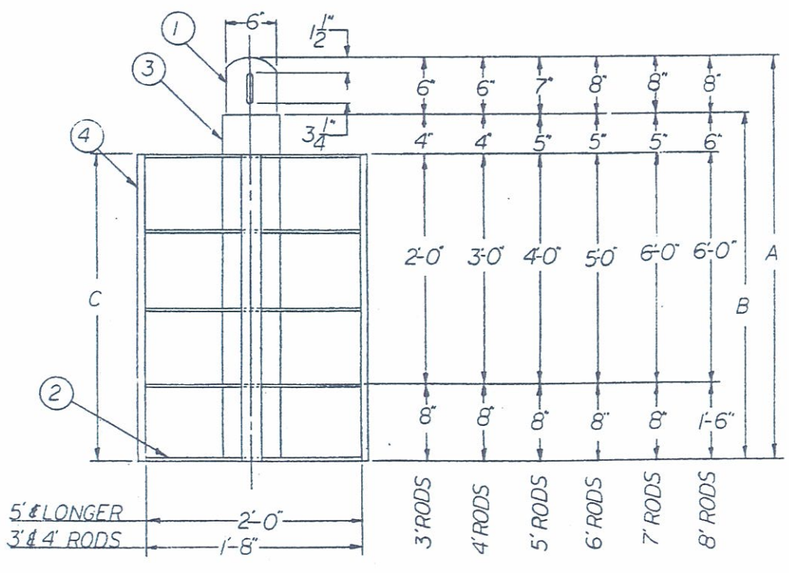

ROD SIZE	A	B	C
3'-0"	3'-6"	3'-0"	2'-8"
4'-0"	4'-6"	4'-0"	3'-8"
5'-0"	5'-8"	5'-1"	4'-8"
6'-0"	6'-9"	6'-1"	5'-8"
7'-0"	7'-9"	7'-1"	6'-8"
8'-0"	8'-8"	8'-0"	7'-6"

AMERICAN SPIN-A-BATCH CO.
Richmond, Virginia

Scale 1/2" = 1'-0"	Date July 9 1980
Long Rods and Partial Dipping Skeleton Basket	
Drawing no. SAB 205	Drawn wkd

ITEM	QTY	CUT DIMENSIONS	DESCRIPTION
1-1	1	3/4" PLATE x 3'-0" x 5'-9 3/8"	ROLL TO 1'-10" OD-WELD
2-1	1	250 GA. WIRE x 2'-5" x 5'-9"	" OVERLAP AT BOLTS
3-1	1	5/8" PLATE x 5 5/8" x 3'-9"	LIFT BALE
4	4	1/2" BAR x 6 7/8" ID x 8 1/8" OD	COVER SUPPORT RING
5	1	3/8" PLATE x 1'-8 1/2" DIA	PERFORATED
6-1	1	6" SCHED 80 PIPE x 3'-0"	CENTER POST
7	4	1/2" PLATE x 5" x 6 15/16"	REINFORCING BAR
8	2	3/4" x 2" NELSON STUD	
9	1	3/8" PLATE x 1'-7 1/2"	LID
10	2	3/8" DIA x 1'-0"	HANDLE
11		5/8" x 2" CARRIAGE BOLTS, NUTS, WASHERS	
1-2	1	3/4" PLATE x 3'-6" x 5'-9 3/8"	BASKET SHELL
2-2	1	250 GA. WIRE x 2'-11" x 5'-9	ROLL & OVERLAP AT BOLTS
3-2	1	5/8" PLATE x 5 5/8" x 4'-3"	LIFT BALE
6-2	1	6" SCHED 80 PIPE x 3'-6"	

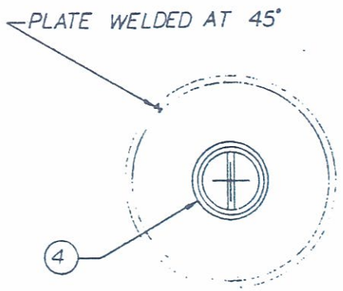

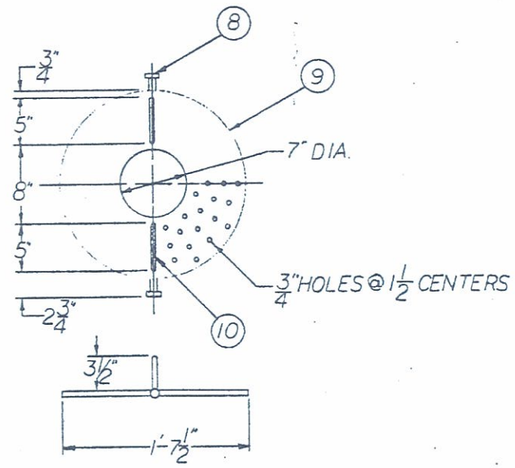

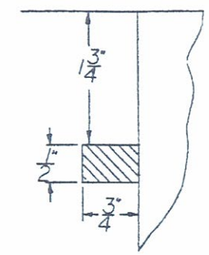

DETAIL B
FULL SCALE

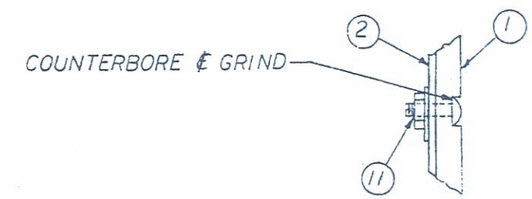

DETAIL C
NO SCALE

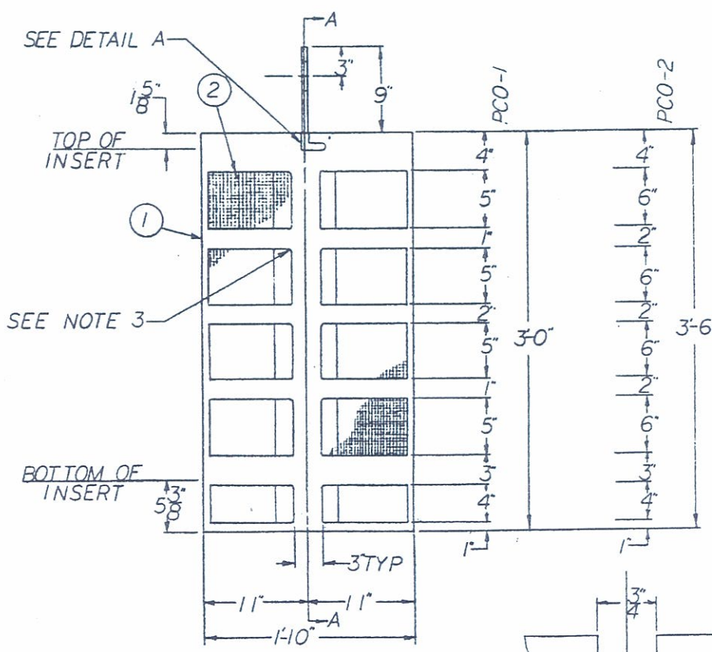

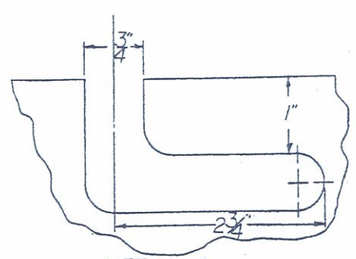

DETAIL A
FULL SCALE

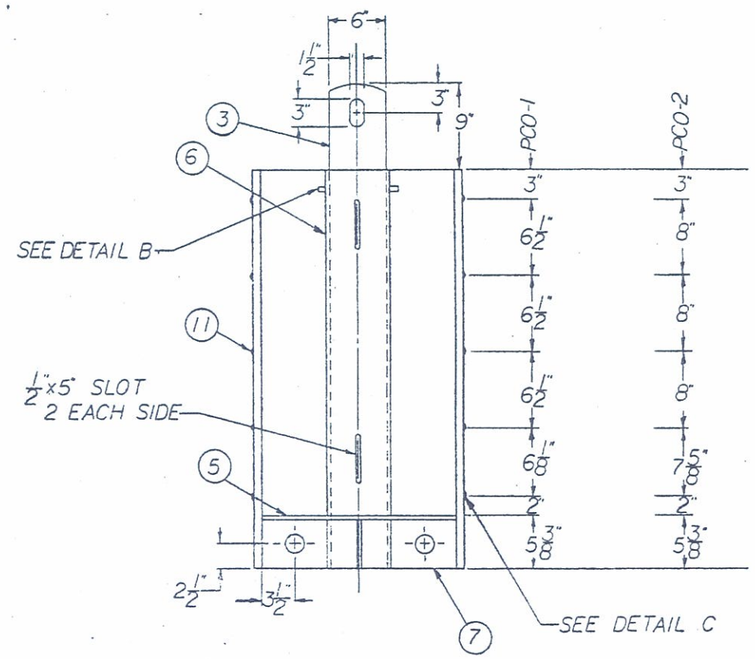

SECTION A-A

NOTES 1. Basket is all welded construction - Bolts shown in detail A retain 250 ga. throw-away wire insert.

2. Openings in wire insert to be dermined by customer based on size & type product to be spun.

3. Cut-outs in basket shell are as dimensioned vertically x 1'-2 3/8" - Round corners, grind smooth

4. Expanded metal may be substituted for crimped wire to obtain extended usage

Note:

Drawings are:

- provided by American Spin-A Batch Co. International as examples of baskets that work for our host plant - Virginia Galv. Corp.
- not intended to apply to all galvanizing plants methods or materials.
- not for reprint or resale by parties other than American Spin-A-Batch Co. International.

AMERICAN SPIN-A-BATCH CO.	
Richmond, Virginia	
Scale 1 1/2" = 1'-0"	Date July 7 1980
Basket PCO-1 & PCO-2	
Drawing no. SAB 206	Drawn wkd

ITEM	QTY	CUT DIMENS.	DESCRIPTION
1	1	5/8 PLATE x 8½" x 8½"	
2	2	3 C 5.0 x 1'-8½"	5/8 PLATE BETWEEN
3	2	3/4 PLATE x 4" x 1'-2"	
4	1	3/4 PLATE x 2'-6" x 6'-0"	ROLLED TO 1'-10" DIA
5	1	250 GA WIRE 2'-4" x 5'-9"	ROLLED-OVERLAP AT BOLTS
6	1	3/8 PERF PLATE x 1'-10" DIA	3/4" DIA ON 1½" CENTERS
7	2	3/4" SQ. x 1"	COVER PLATE SUPPORT
8	2	1/2" NELSON STUD x 2"	
9	1	3/8" PLATE x 1'-7½" DIA	PERFORATED
10	2	5/8" DIA x 1'-0"	HANDLE SEE NOTE 3
11	10	5/8" x 2" HI-STRENGTH	BOLTS/NUTS/WASHERS
12	2	5/8" x 4" x 8"	
13	4	3/4" PLATE x 4" x 5"	

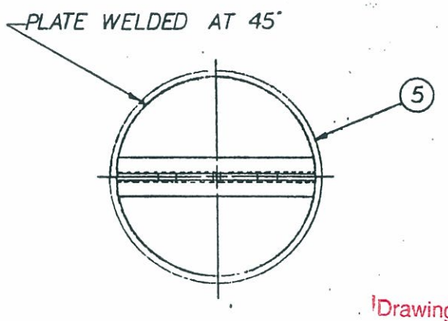

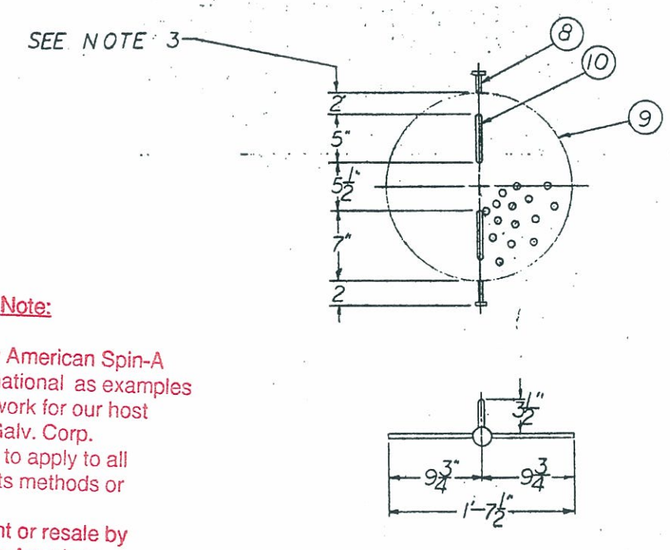

Note:

Drawings are:

- provided by American Spin-A Batch Co. International as examples of baskets that work for our host plant - Virginia Galv. Corp.
- not intended to apply to all galvanizing plants methods or materials.
- not for reprint or resale by parties other than American Spin-A-Batch Co. International.

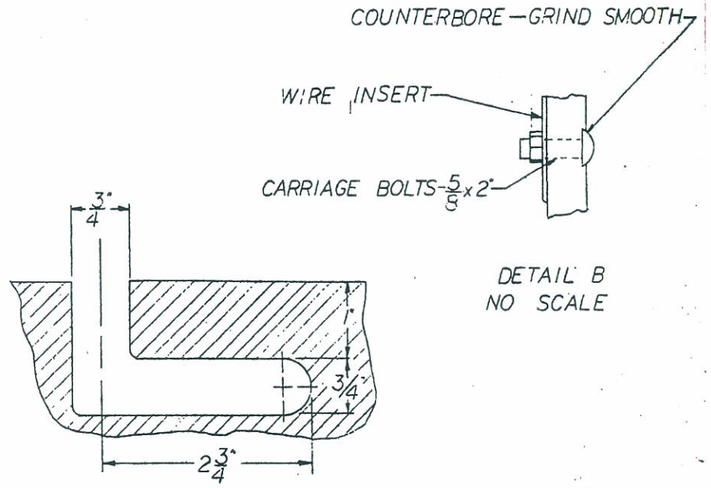

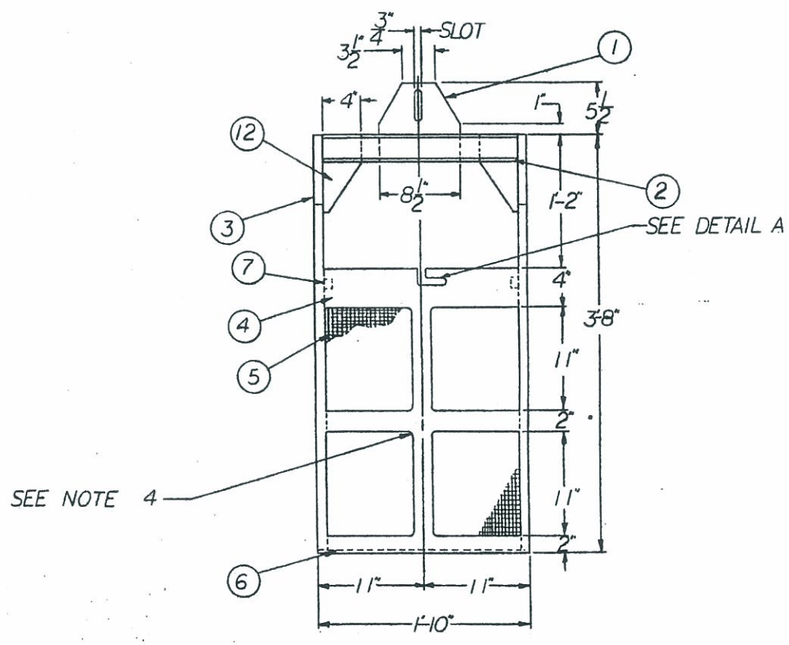

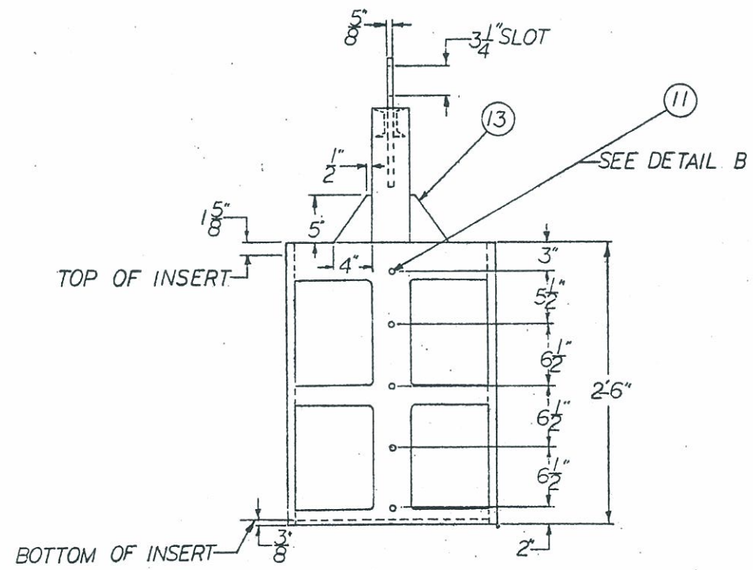

NOTES

1. BASKET IS ALL WELDED CONSTRUCTION — BOLTS SHOWN IN DETAIL B RETAIN .250 GAUGE THROW-AWAY WIRE INSERTS
2. WIRE INSERT OPENING TO BE DETERMINED BY CUSTOMER BASED ON TYPE & SIZE PRODUCT TO BE SPUN
3. DIMENSIONS ON COVER HANDLES APPROX. PLACE & WELD BASED ON PERFORATIONS — SYMMETRICAL
4. CUT-OUTS IN 3/4" MAIN BASKET ARE 11" x 1'-3½" — ROUND CORNERS AND GRIND SMOOTH
5. EXPANDED METAL MAY BE SUBSTITUTED FOR WOVEN OR CRIMPED WIRE INSERTS FOR EXTENDED USAGE.

PLATE CUT-OUT TYPE SPIN-A-BATCH BASKET
Suited for nails, woodscrews, small machine bolts, washers.
Approx. loads to 600 lbs. For use with shallow depth kettles.

AMERICAN SPIN-A-BATCH CO.	
Richmond, Virginia	
Scale 1½" = 1'-0"	Date June 26 1980
Plate Cut-out Basket	
Drawing no. SAB 207	Drawn wkd

Note:

Drawings are:

- provided by American Spin-A Batch Co. International as examples of baskets that work for our host plant - Virginia Galv. Corp.
- not intended to apply to all galvanizing plants methods or materials.
- not for reprint or resale by parties other than American Spin-A-Batch Co. International.

ITEM	QTY	CUT DIMENS	DESCRIPTION
A	1	3/4"x5"x2'-11 1/2"	TOP LOCKING RING
B	3	3/4"x2"x2'-11 1/2"	SUPPORT RINGS
C	1	3/4"x2"x TO FIT	OUTER RING
D	2	3/4"x4"x2'-23 1/4"	VERTICAL SUPPORT
E	2	3/4"x4"x3'-7 3/4"	BALE SUPPORT
F	2	4"x5.4 CHANNEL	BALE
G	1	3/4"x9"x1'-0"	HOOK PLATE
H	1	1/4"x3"x1'-2"	BALE REINF PLATE
I	2	3/4"x4"x9 1/2"	BALE GUSSET
J	2	1/2"x4"x1'-0"	BALE RING GUSSET
K	4	1"x1 1/2"x2"	LID SUPPORT
L	4	3/4" SQ.-CUT PER LID DETAIL	
M	10	1/8"x1 1/2"x TO FIT	OUTER BASKET CLAMP
N	10	1/8"x1 1/2"x TO FIT	INNER " "
P	16	3/8"x2"x2 1/2"	BOLT WASHER
Q	16	1/4"x2"x2 1/2"	BOLT SPACER
R	16	5/8"x4" SQ. HD	BOLT
S	16	5/8" HEX	NUT
T	1	3/8"x2'-6 1/2"	BOTTOM PLATE
U	1	1/4"x2'-0 1/2" DIA	LID
W	2	1/2"x2"x2"	LOCKING LUGS
X	4	3/8"x1"x2'-6 1/2"	
Y	4	5/8"x1" CUT TO	FIT BOTTOM PLATE
Z	1	2'-0"x2'-2"	CRIMPED WIRE INSERT
			TYPE 1006-08 STEEL
			(BUFFALO WORKS OR
			EQUAL)

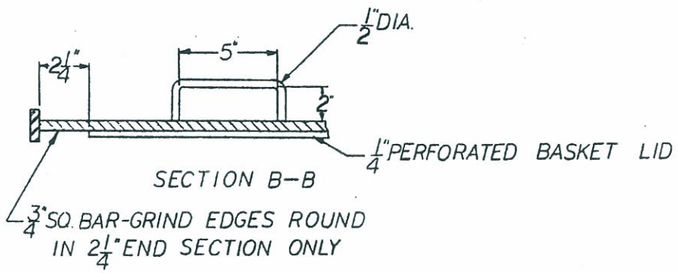

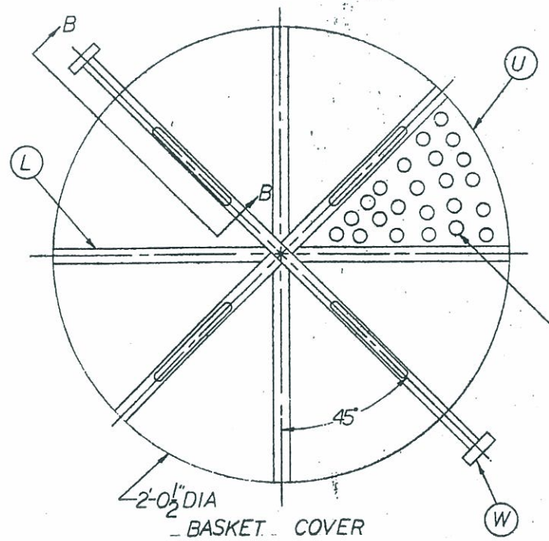

3/4" HOLES ON 1 1/2" CENTERS, RANDOM LAY-OUT-NONE AT WELDS OR WITHIN 1 1/2" OF EDGE OF LID

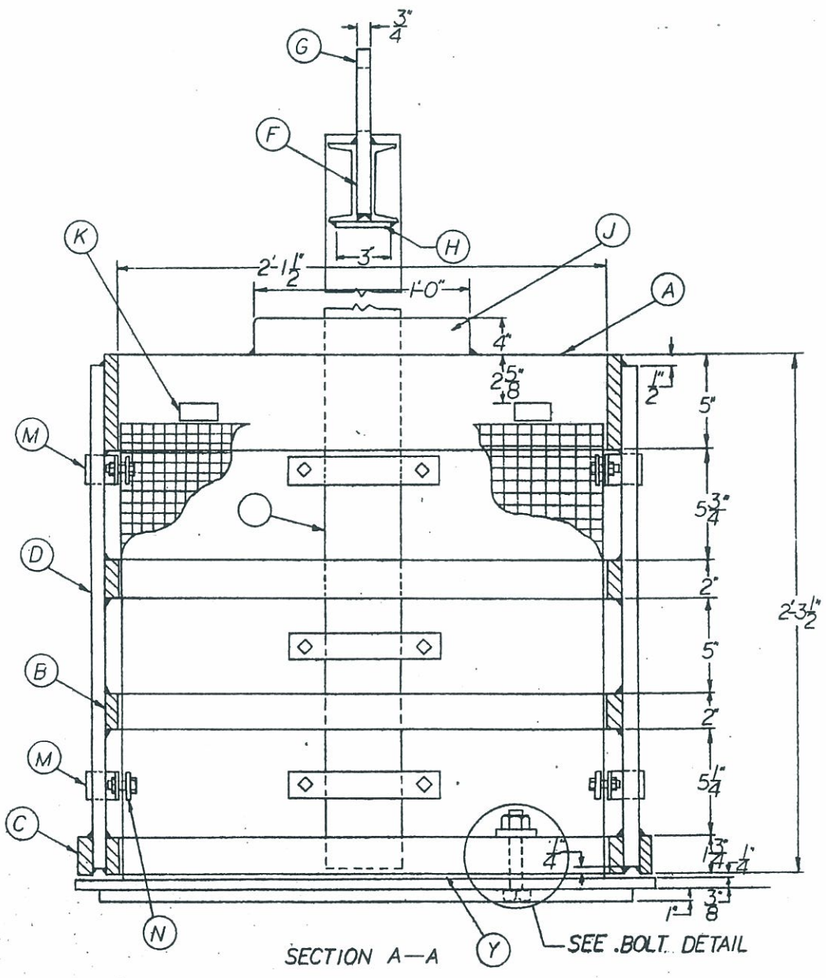

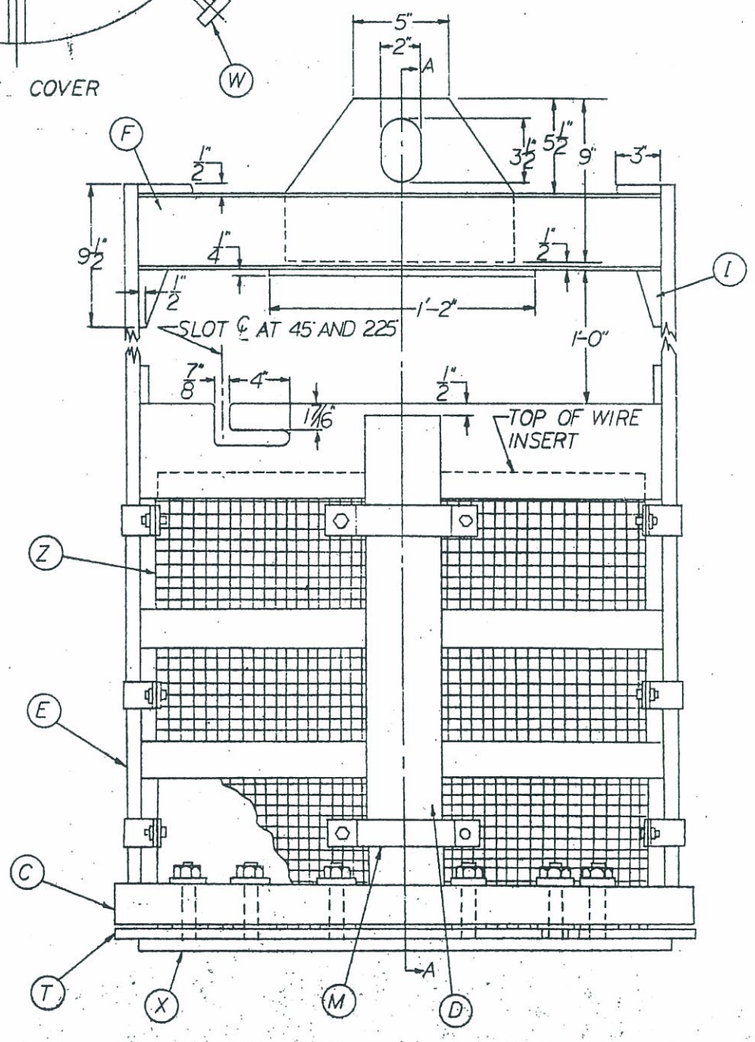

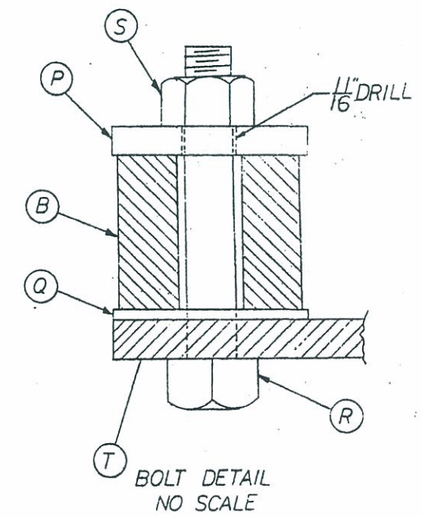

SEE DRG NO. SAB 209 FOR BASE

AMERICAN SPIN-A-BATCH CO.	
Richmond, Virginia	
Scale: 3" = 1'-0"	Date June 23 1980
BASKET A WITH WIRE INSERT	
Drawing no. SAB 208	Drawn wkd

NOTES CONE BOTTOM
1 1/4" Plate-use 1/4" holes @ 1/2" centers-stagger
2. 3/8" Plate-use 1/2" holes @ 1" centers-stagger

CONE BOTTOM B BASKET

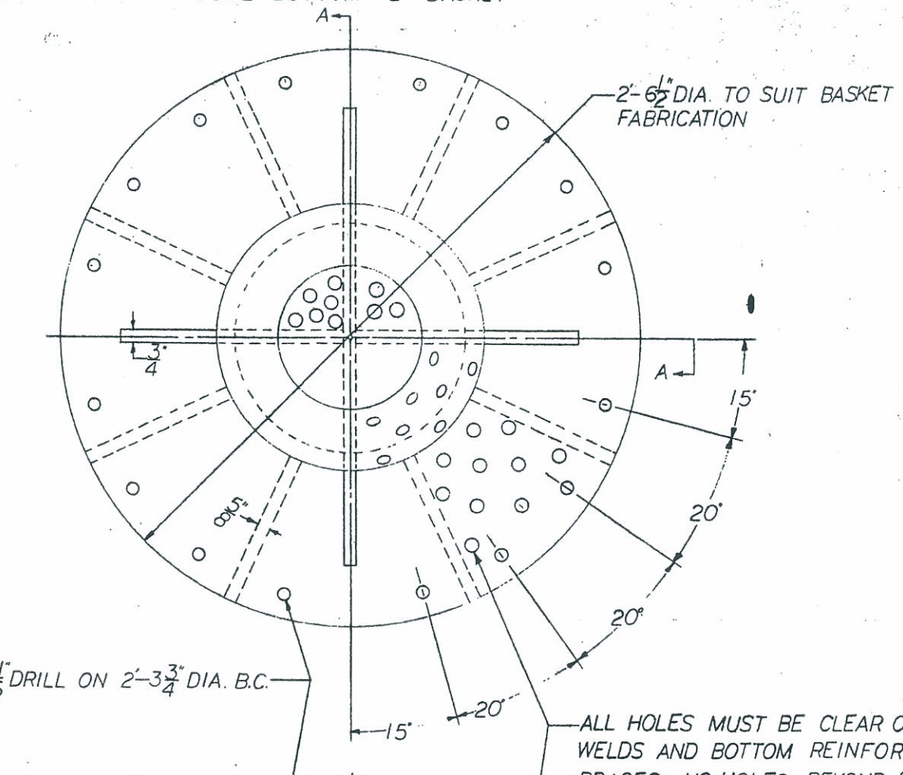

ALL HOLES MUST BE CLEAR OF ALL WELDS AND BOTTOM REINFORCING BRACES. NO HOLES BEYOND 2'-1" DIA. CIRCLE. HOLES SIMILAR IN EACH SECTION

2'-6 1/2" DIAMETER – TO SUIT BASKET FABRICATION

NOTES PLAIN BOTTOM
1 1/4" Plate-use 1/4" holes @ 1/2" centers-stagger
2. 3/8" Plate-use 1/2" holes @ 1" centers-stagger
3. 3/8" Plate-use 3/4" holes @ 1 1/2" centers-stagger

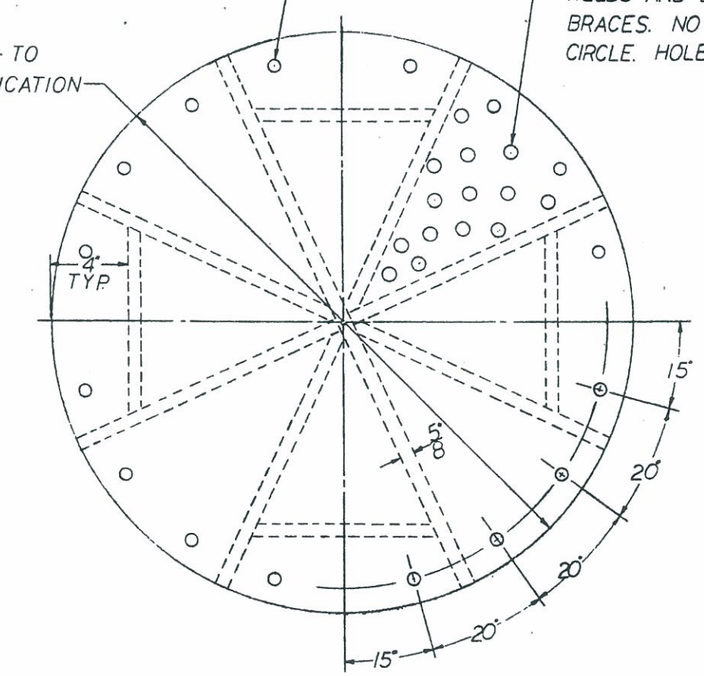

PLAIN BOTTOM-"A" BASKET

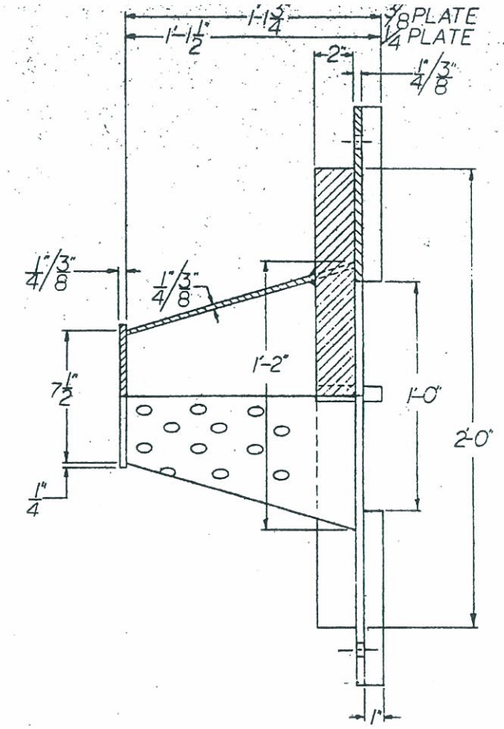

SECTION A–A

NOTES

1. Bottoms "A" and "B" are interchangeable.
2. All welded construction-use 6012-A welding rods only.
3. Bottom plates, both baskets, of lowest C. and Si steel available (fire box steel)
4. 3/4" Bars for rings A, B & C are A-285-70A grade B steel with following analysis: C=0.15%, Mn=0.38%, P=0.011%, S=0.024%. Yield=33,900, Tensile=56,800

Note:

Drawings are:

- provided by American Spin-A Batch Co. International as examples of baskets that work for our host plant - Virginia Galv. Corp.
- not intended to apply to all galvanizing plants methods or materials.
- not for reprint or resale by parties other than American Spin-A-Batch Co. International.

USE WITH DRG. NO SAB 208.

AMERICAN SPIN-A-BATCH CO.	
Richmond, Virginia	
Scale 3" = 1'-0"	Date July 8 1980
Plain and Cone Bottom Plate	
Drawing no. SAB 209	Drawn wkd

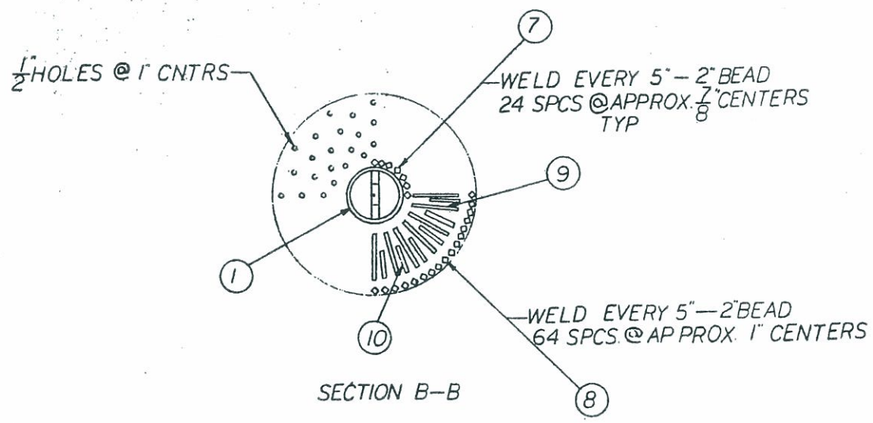

SECTION B–B

Note:

Drawings are:

- provided by American Spin-A Batch Co. International as examples of baskets that work for our host plant - Virginia Galv. Corp.
- not intended to apply to all galvanizing plants methods or materials.
- not for reprint or resale by parties other than American Spin-A-Batch Co. International.

ITEM	QTY	CUT DIMENSIONS	DESCRIPTION	NOTES
1	1	6" x 4'-0" SCHED 40 PIPE	CENTER PIPE	PERF
2	1	3/4" PLATE – 6" x 4'-9"	LIFTING BALE	
3	3	3/4" SQ x 6'-8"	BASKET REINF. BAR	
4	1	3/8" PLATE x 4'-0" x 5'-9 1/2"	" SIDE WALL	PERF
5	1	3/8" PLATE x 1'-9 1/4"	" FLOOR	PERF
6	4	3/8" " x 6" x 7 1/4"	" REINF. BAR	2" HOLE
7	24	3/8" SQ x 3'-6"	INNER SPACERS	ON EDGE
8	64	" "	OUTER " "	
9	24	3/8" SQ x 5"	BOTTOM " "	
10	24	" x 3"	" " "	

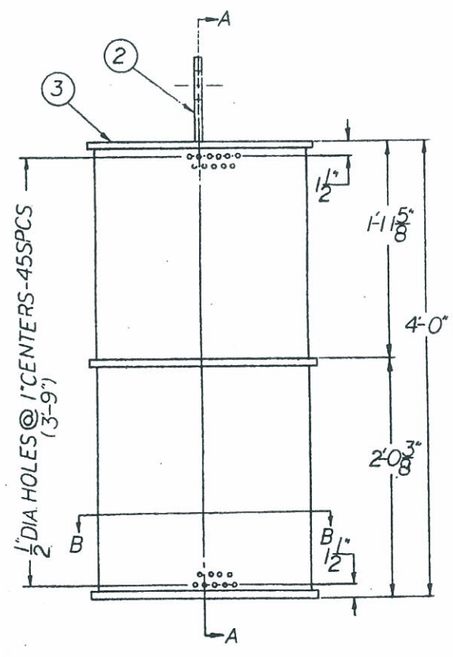

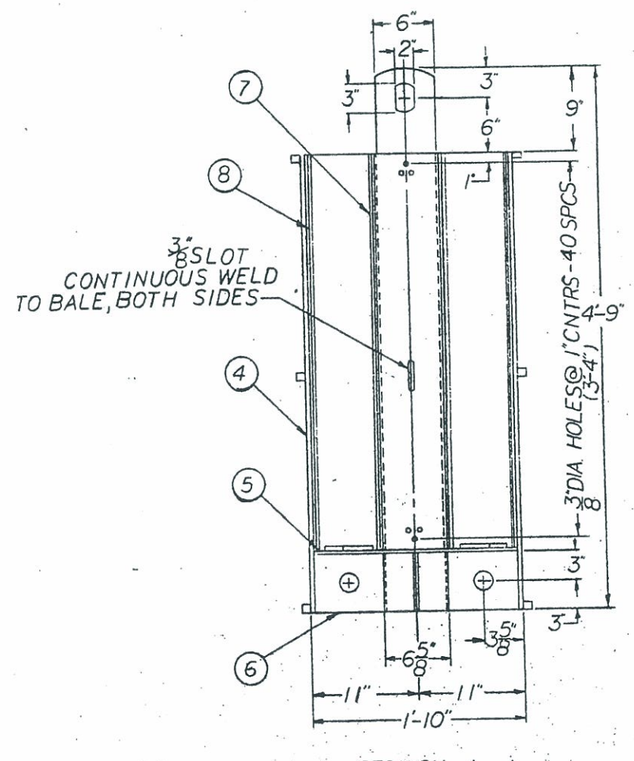

SECTION A–A

FABRICATION SEQUENCE

1. Cut all material per Bill of Materials.
2. Roll basket shell and 3/4" reinf. bar.
3. Weld basket seam.
4. Install 3 pcs. 3/4" reinf. rings.—weld.
5. Drill 6" pipe perforations, cut weld slots.
6. Install and weld lifting bale to 6" pipe.
7. Weld 3/8" inner spacers to 6" pipe.
8. Weld bottom spacers to bottom plate.
9. Weld outer spacers to basket wall.
10. Install and weld bottom floor.
11. Insert pipe & bale, center and weld to floor.
12. Install & weld 4 bottom reinf. bars.

NOTE: All welds continuous, top & bottom of all members unless otherwise noted.

AMERICAN SPIN-A-BATCH CO.	
Richmond, Virginia	
Scale 1 1/2" = 1'-0"	Date July 2 1980
No. 8 Chain Basket	
Drawing no. SAB 210	Drawn wkd